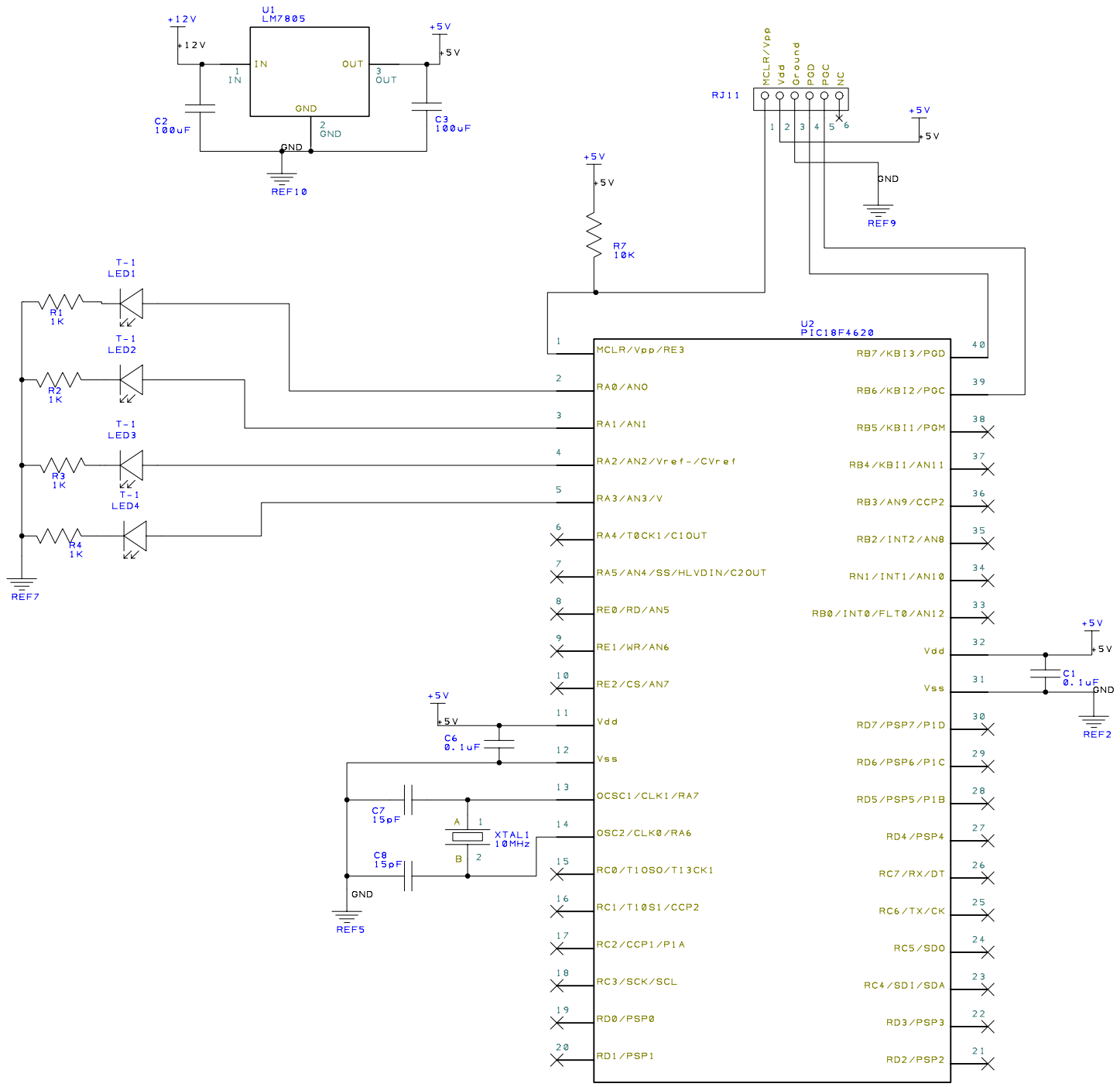
U1
LM7805
+12V
+12V
IN
OUT
GND
1
IN
3
OUT
2
GND
+5V
+5V
C2
100uF
C3
100uF
GND
REF10
RJ11
MCLR/Vpp
Vdd
Ground
PGD
PGC
NC
1 2 3 4 5 6
+5V
+5V
GND
REF9
+5V
+5V
R7
10K
T-1
LED1
R1
1K
T-1
LED2
R2
1K
T-1
LED3
R3
1K
T-1
LED4
R4
1K
REF7
U2
PIC18F4620
MCLR/Vpp/RE3
RA0/AN0
RA1/AN1
RA2/AN2/Vref-/CVref
RA3/AN3/V
RA4/T0CK1/C1OUT
RA5/AN4/SS/HLVDIN/C2OUT
RE0/RD/AN5
RE1/WR/AN6
RE2/CS/AN7
Vdd
Vss
OCSC1/CLK1/RA7
OSC2/CLK0/RA6
RC0/T1OSO/T13CK1
RC1/T1OS1/CCP2
RC2/CCP1/P1A
RC3/SCK/SCL
RD0/PSP0
RD1/PSP1
RB7/KBI3/PGD
RB6/KBI2/PGC
RB5/KBI1/PGM
RB4/KBI1/AN11
RB3/AN9/CCP2
RB2/INT2/AN8
RN1/INT1/AN10
RB0/INT0/FLT0/AN12
Vdd
Vss
RD7/PSP7/P1D
RD6/PSP6/P1C
RD5/PSP5/P1B
RD4/PSP4
RC7/RX/DT
RC6/TX/CK
RC5/SDO
RC4/SDI/SDA
RD3/PSP3
RD2/PSP2
+5V
+5V
C1
0.1uF
GND
REF2
+5V
+5V
C6
0.1uF
C7
15pF
C8
15pF
A
B
XTAL1
10MHz
GND
REF5